Savannah River National Laboratory™

OPERATED BY SAVANNAH RIVER NUCLEAR SOLUTIONS

We put science to work.™

Assessing Public Health Risks from SRS Air Emissions

Charles Hunter
Manager, Atmospheric Technologies Group

Alexis Johnson
2015 Summer Intern, Atmospheric Technologies Group

Presentation to the SRS Citizens Advisory Board
May 24, 2016

Savannah River NUCLEAR SOLUTIONS℠
FLUOR • NEWPORT NEWS NUCLEAR • HONEYWELL

Purpose

- To fulfill a 2016 Facilities Disposition and Site Remediation Committee Work Plan Commitment

MAJ1

- To provide the CAB and public the results from SRS Emissions Modeling performed as recommended by the 2014 Agency for Toxic Substances and Disease Registry (ATSDR) Public Health Assessment (PHA) for Off-Site Air Contamination from the Savannah River Site

Slide 2

MAJ1 verify with Avery Hammett
I tried to contact Avery but was unable to contact her
MEYER, AMY JO, 5/10/2016

Acronyms and Definitions

AERMOD - **A**merican Meteorological Society / **E**nvironmental Protection Agency **R**egulatory **Mod**el

ATDSR - Agency for Toxic Substances and Disease Registry

Acute toxicity - Adverse effects from a single exposure to a substance over a short period of time (usually less than 24 hours).

Chronic toxicity - Adverse affects caused by long-term exposure to a substance (months or years).

Carcinogen - Any substance capable of causing cancer in living tissue.

CREG - Cancer risk exposure guideline. Airborne concentration of a substance that is highly unlikely to result in an increase in cancer rates in the exposed population.

IUR - Inhalation unit risk. Estimate of the increased cancer risk from an individual's continuous inhalation exposure to a 1 mg/m^3 concentration of the chemical substance over a lifetime.

LOAEL - Lowest observable adverse effects level.

NOAEL - No observable adverse effects level.

RfC - Inhalation reference concentration. Estimated airborne concentration of a chemical for which continuous inhalation exposure is likely to be without risk of deleterious non-cancer effects over a lifetime.

SCDHEC - South Carolina Department of Health and Environmental Control

TCE - Trichloroethylene

SRNL Atmospheric Technologies Group Overview

- **Comprehensive meteorological monitoring program, supporting:**
  - Real-time emergency response.
  - Long-term data sets used in environmental impacts studies and design safety.
  - Safe facility operations.
- **Modeling releases of air and waterborne contaminants**
  - ATG's **WIND System** for emergency response.
  - International non-proliferation emissions attribution.
- **Applied Studies**
  - Weather forecasting for operations planning, severe weather response, wildfire management.
  - Occurrence frequencies of extreme weather events for nuclear facility design.
  - Air quality modeling for regulatory compliance, i.e., DHEC air permits applications, and workplace chemical exposures.

Meteorological Monitoring

Atmospheric Release Modeling

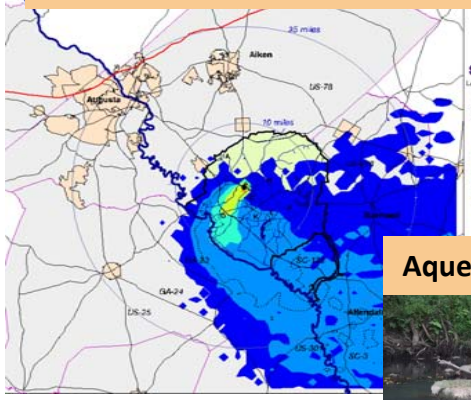

Aqueous Release Modeling

Severe Weather Forecasting

ATSDR final report - 2014

Three primary findings from the 2014 CDC *Agency for Toxic Substances and Disease Registry* (**ATSDR**) Evaluation of Off-Site Air Contamination from SRS:

- Emissions of radioactivity and criteria air pollutants (SO2, CO, NOx, PM, ozone, and lead) were unlikely to cause adverse health effects in the general population.

- There was insufficient data to evaluate **non-cancer** effects from **trichloroethylene (TCE) emissions**
  - *Recommendation*: short & long term air modeling based on actual emissions
- There was insufficient data to evaluate **cancer** effects from emissions of **toxic air pollutants** (i. e., SCDHEC Standard 8 pollutants).
  - *Recommendation*: long term modeling for all carcinogens on site

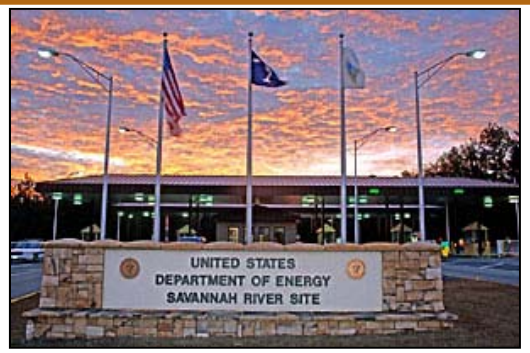

Sources: Left: cdc.gov and
Right: SRNL ATG

Background: Toxicity

- **Toxicity**: acute/chronic, cancer/non-cancer
  - For TCE we assess both acute and chronic exposure for non-cancer effects
  - For all others, only chronic exposure posing a cancer risk is examined
- Guidelines for sensitive groups

Source: dddmag.com

Toxicity Testing, Epidemiological Studies → **Effects levels: NOAEL, LOAEL** → **Exposure Concentration Thresholds: MRL, Rfc, CREG** → **RISK?**

Risk Analysis: Chronic Exposure

- **Reference concentration (RfC)** for non-cancer health effects = NOAEL/UF x MF
- **Inhalation unit cancer risk factor (IUR)** for cancer effects - extrapolated from testing.
- **Cancer risk evaluation guide (CREG)** a cancer screening level = 1×10^{-6}/IUR
- **Increased Cancer Risk** = Air concentration ($\mu g/m^3$) x IUR

Target risk : 1.0×10^{-6} = 0.000001
or, 1 excess cancer per one million people

Current baseline values:

National:	5.0×10^{-5}
South Carolina:	4.2×10^{-5}
Aiken County:	4.8×10^{-5}

Assumes a 70 year lifetime exposure

Source: srs.gov

Note that the ATSDR considers a risk of ***1.0×10^{-4}*** *(one in 10,000 people) as unlikely to produce a health concern*

Pollutant Screening Process

- SRS emits 43 of 256 **SCDHEC Standard 8 Toxic Pollutants**
  - 18 are listed by EPA **carcinogens** including TCE

1. **24 hr max:** Title V modeling max permitted emissions (SRNL-L2200-2014-00006)
2. Estimate annual max: $\mathbf{C_{annual} = C_{24hr}(8760/24)^{-0.3}}$
3. Compare to **RfC**, **CREG**
4. If either is within 50% of RfC, select for **modeling** using actual emissions
5. If **annual** max > **CREG**, calculate risk
6. If **risk > 10^{-6}**, select for **modeling** using actual emissions

Screening Results

Chemical	No. Sources	Title V 24 hr Max ($\mu g/m^3$)	Estimated Annual Max ($\mu g/m^3$)*	RfC ($\mu g/m^3$)	CREG ($\mu g/m^3$)
Carbon Tetrachloride (CCl_4)	20	11.3	2.28	100	0.167
Chloroform	6	44.6	9.34	100	0.0435
Chromium (Cr) Compounds	2	0.0145	0.00142	0.008	8.33×10^{-5}
1,1-Dichloroethylene	3	7.50	1.50	200	0.02
Manganese (Mn) Compounds	5	0.0254	0.0246	0.05	-
Tetrachloroethylene (PCE)	53	1320	284	40	3.85
Trichloroethylene (TCE)	62	315	68	2	0.244

*estimated

Air Dispersion Modeling: AERMOD

- **EPA** model recommended for regulatory air quality applications
- Pollutant diffusion as a Gaussian process using hourly meteorological data (wind, **turbulence**, temperature, boundary layer)
- Processors for topography, met data, buildings
- **Flexible configuration**
  - Multiple emission sources
  - Averaging times: 1hr – **annual**
  - Plume rise due to momentum and buoyancy
  - Elevated **receptor** grid arrays
  - Transport & dispersion around **buildings**

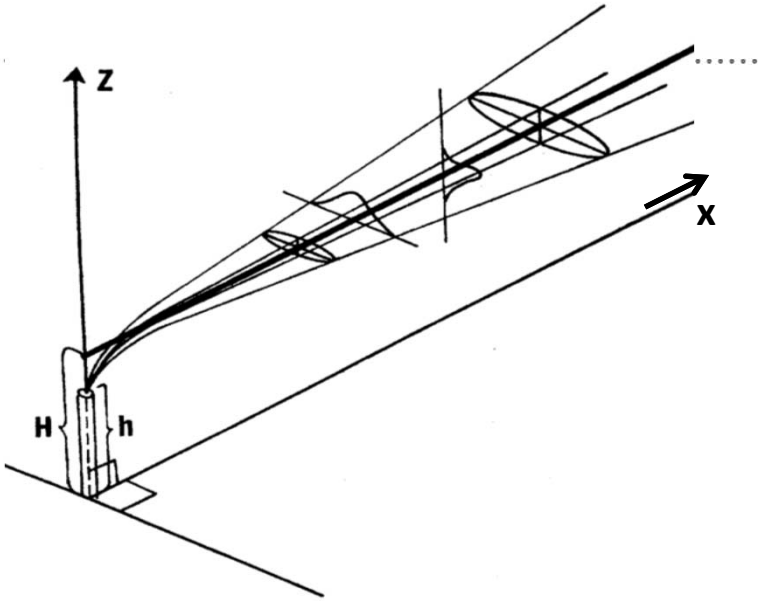

$$C = \frac{Q}{2\pi\sigma_y\sigma_z U} e^{\frac{-y^2}{2\sigma_y^2}} \left[e^{\frac{-(z-H)^2}{2\sigma_z^2}} + e^{\frac{-(z+H)^2}{2\sigma_z^2}} \right]$$

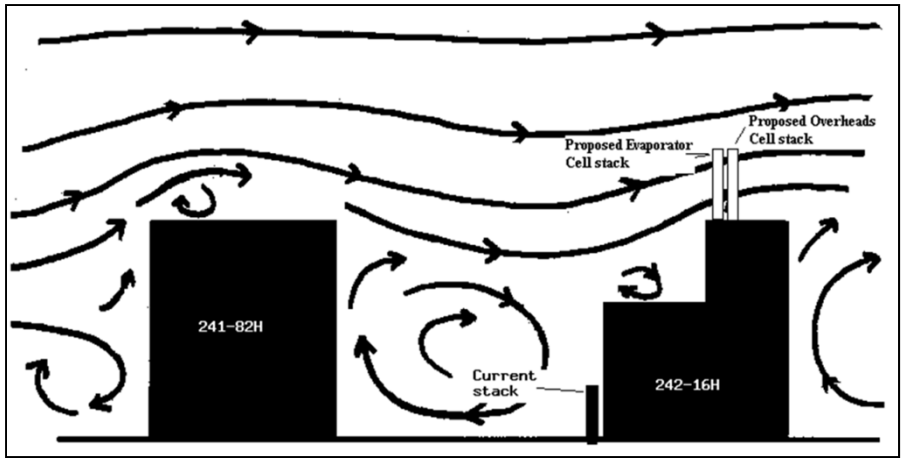

Data Collection & Model Setup

Source: SRNL ATG

- 7 toxics exceed screening guidelines using **maximum permitted** modeling data

- **Actual emissions** modeled with corresponding annual met data
- **2002-2010** meteorology from SRS Central Climatology Site and National Weather Service
- 1344 **boundary receptors**
- Max emissions years modeled for most recent 5 years of weather
- **Assume** continuous emissions

Results: Non-Cancer Impacts from TCE

- **24 hr** Maxima consistently > RfC, but less than EPA's LOAEL of 21 μg/m^3
- Annual Max > RfC in **2006 only**

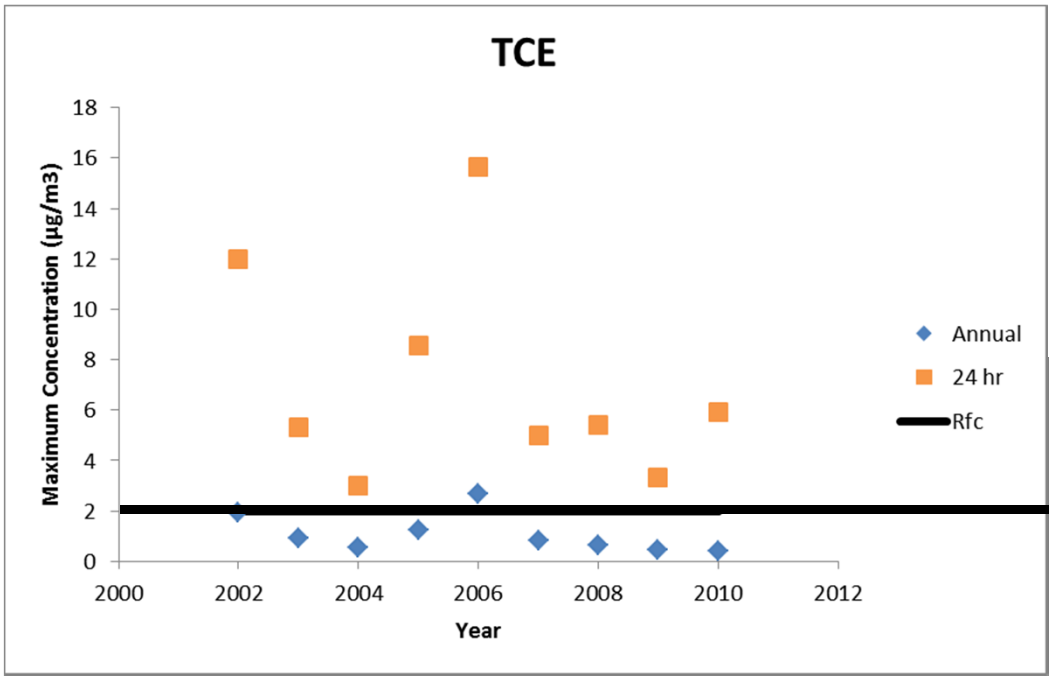

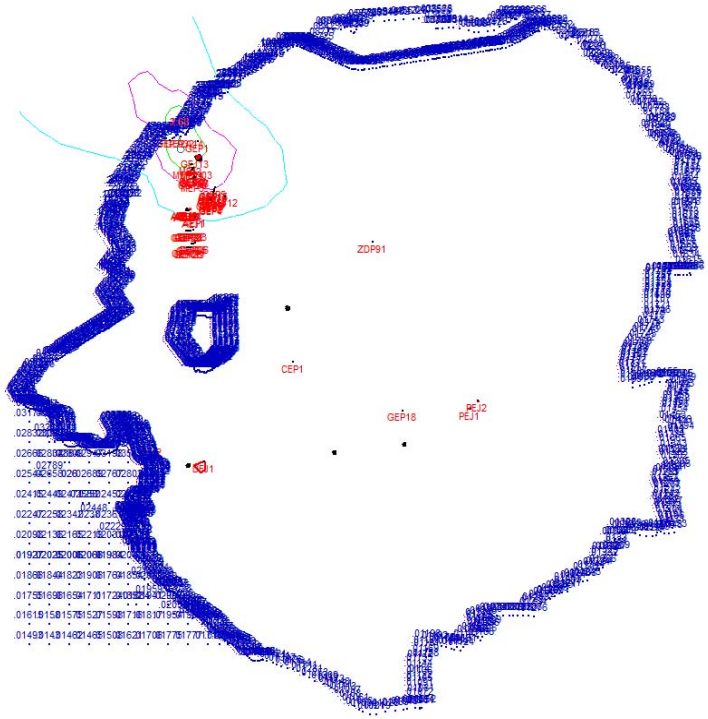

Emissions plateau upon reduction of source term from remediation projects

Results: Carcinogens

Chemical Name	Daily Max ($\mu g\ m^{-3}$)	Annual Max ($\mu g\ m^{-3}$)	Increased Risk
Carbon tetrachloride	1.1	0.030	1.8×10^{-7}
Chloroform	0.063	0.0089	1.6×10^{-7}
Chromium	0.005	0.00025	**3.0×10^{-6}**
1,1-Dichloroethylene	0.044	0.0034	1.7×10^{-7}
PCE	52	7.9	2.1×10^{-6}
TCE	16	2.7	**1.1×10^{-5}**

- **Chromium compounds**

- Maximum excess cancer risk associated with **2006** emissions

- No screening level exceedances since

- **Trichloroethylene (TCE)**

- 2002 through 2010: annual max > CREG
- Maximum risk in **2006**
- No other years with > 10^{-6} risk

Total Excess Cancer Risk = **1.4×10^{-5}**

This value is less than the national average risk of **5.0×10^{-5}**

Conclusions

TCE (non-cancer)

- **Chronic** impacts unlikely: Annual maximum concentrations < RfC.
- **Acute** impacts unlikely: 24-hr maximum > RfC, but < EPA's LOAEL and all occupational standards.

Carcinogens

- Target Risk (10^{-6}) < **Total Risk** < National Average $5x10^{-5}$
- ASTDR considers risks less than 10^{-4} as unlikely to pose a health concern.
- Emissions of compounds of concern have decreased upon reduction of source term from remediation projects.

Contact Information

Mr. Charles H. (Chuck) Hunter
Manager, Atmospheric Technologies Group

Savannah River National Laboratory
Building 773-A
Aiken, SC 29808

E-mail: chuck.hunter@srnl.doe.gov
Office ph: 803-725-2953
Mobile ph: 803-646-9667